Sturtevant
(REG. U.S. PAT. OFF.)

MARINE ENGINE

Model E-4
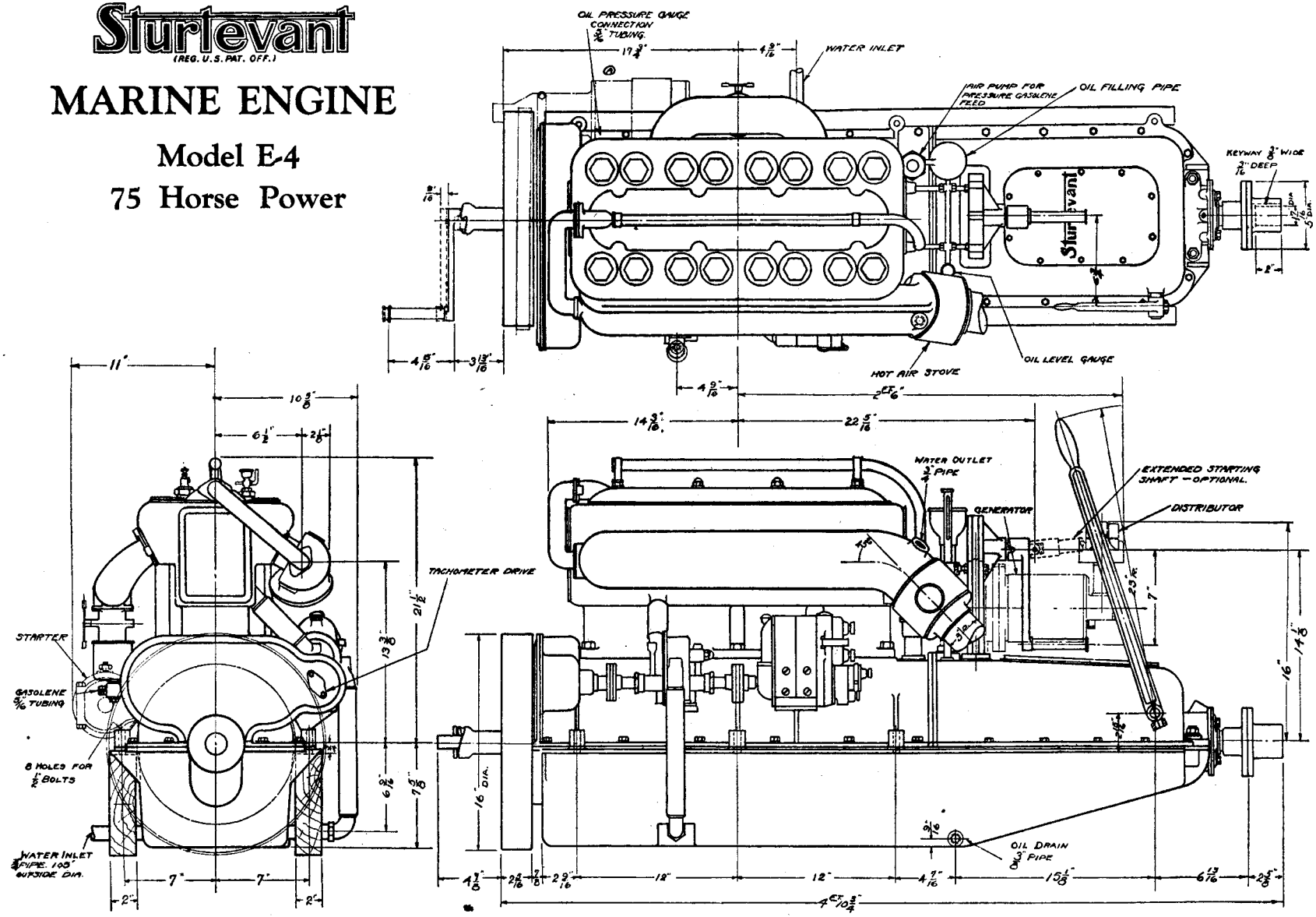
75 Horse Power